EVO 2.0

Material lifters

EVO 3500 TS
EVO 4500 TS

GOLIA

EVO 4500 TS

EVO lifters are a simple, safe and economical solution for lifting and handling requirements in factories and small workshops. They can lift loads of 280 kg up to 3500 or 4500 mm (depending on the model) with ease, thanks to the reduction unit which can be operated by hand or using a power drill/screwdriver (patented system).

A convenient handlebar and four generously sized wheels enable effortless, completely safe handling of loads. The exclusive design enables the 4 feet to be removed to reduce overall dimensions to just 77x53 cm to pass through doors, and also for transportation in vehicles and on small trucks, avoiding the need for cranes or forklifts. The feet can also be swapped between the front and rear, enabling both standard use (load in front of drive unit) or counterweighted use, for handling and installing glass panes down to ground level.

Declaration of conformity

All our lifters come complete with a detailed use and maintenance manual with EC DECLARATION OF CONFORMITY compliant with the relevant provisions of the Machinery Directive 2006/42/EC and the technical standards applied, EN ISO 12100:2010.

Product identification

Every machine is assigned a serial number (also stated in the use and maintenance manual) automatically generated by an in-house system after the individual machine has passed strict final testing, confirming its compliance with our quality and safety standards and authorising us to place it on the market. All serial numbers are therefore managed by in-house software enabling us to trace the history of each one of our machines, from the first internal testing results to the planned and unplanned maintenance it undergoes during its long working life.
Our system also generates an **INDIVIDUAL QR CODE**, applied to each machine.

Individual QR code

Every Golia machine has a unique QR code to enable its immediate identification. Operators can scan this code to access essential technical resources including use manuals, technical diagrams and maintenance specifications. This system enables swift, straightforward customer assistance, improving the lifter's operational management and maintenance.

Warranty

All our machines are covered by our warranty for a period of 12 months from the date of purchase. The warranty's validity and conditions are therefore set out in the use and maintenance manual.

characteristics

A

Handle for moving the machine in its transport configuration: the raised position facilitates handling and reduces operator fatigue.

B

Handlebars in the operating position: their external position makes the machine easy to handle even when fully loaded.

C

Loading/unloading wheels in the transport configuration: this configuration is designed to facilitate loading/unloading the machine on trucks.

D

Inflatable tyres make it easy to handle the machine on rough ground.

E

The feet (with caster wheels and brakes) snap onto the base: this not only reduces the overall dimensions of the machine in its transport configuration, but also enables complete removal of the 4 feet to reduce the machine's weight and make it easier to transport and lift.

F

Extendible base. Two positions are available: 77 cm, ideal for passing through narrow doors, and 116 cm, which offers the greatest stability when fully loaded and raised.

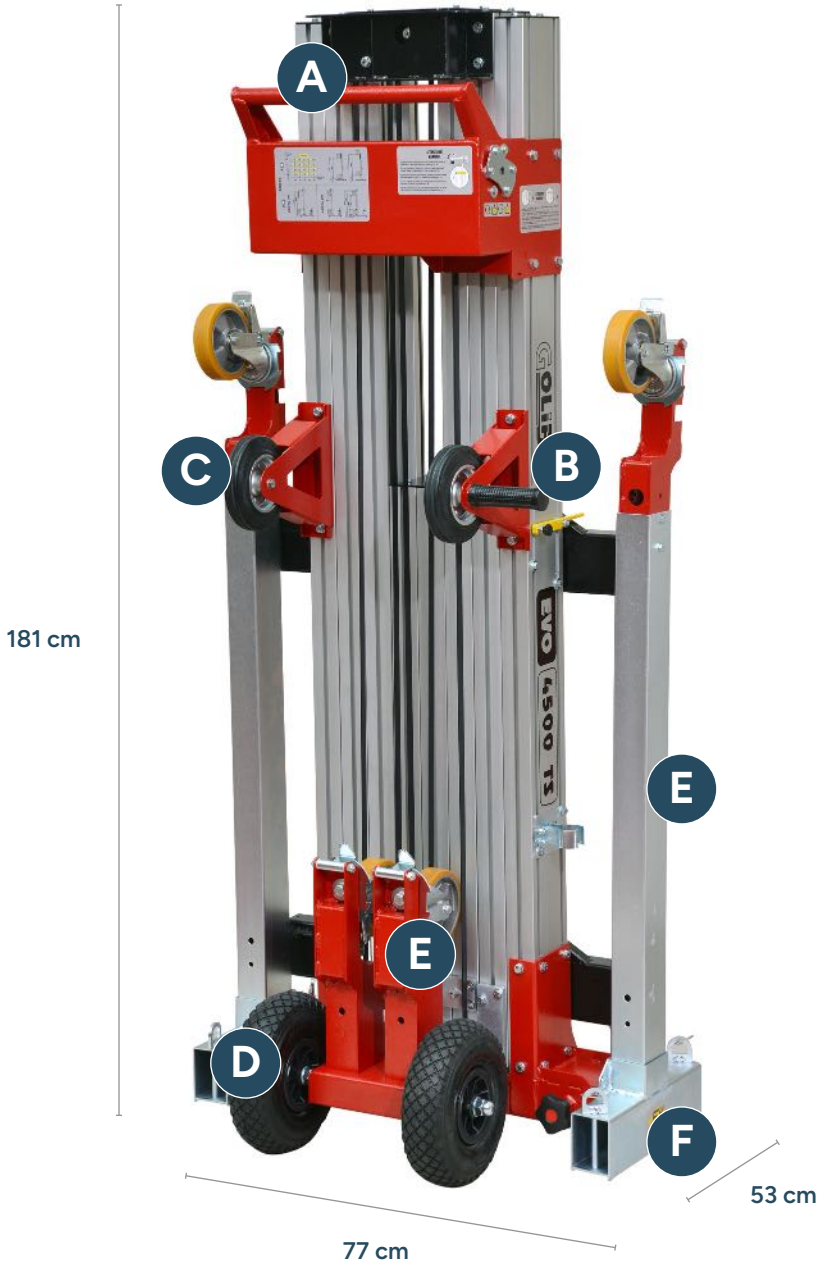

	EVO 3500 TS	EVO 4500 TS
Max load capacity	280 kg	280 kg
Max height	3250 mm	4480 mm
Weight	102 kg	117 kg

Agile and portable

Golia lifters are an ideal solution for anyone looking for a rugged yet agile and easily transportable machine. With their innovative design and Italian-built quality, they are perfect for guaranteeing efficiency in any working environment, from warehouses to construction sites.

accessories included as standard

FORKS

The only machine of its kind on the market supplied as standard with two 900 mm forks enabling lifting of an 80x120 EUR-pallet.

DOCUMENT WALLET

With drive inserts for operation with a power screwdriver, and emergency crank for manual operation.

Operation with a power screwdriver

Our patented system for making your job easier:
Maximum effectiveness with minimum effort.

Safety is our first priority

Safety is key to the design and fabrication of our lifters. We understand our equipment must not only offer outstanding performance, but also assure total safety in the workplace. With their integrated centrifugal brakes and anti-drop devices, Golia lifters are at the cutting edge for safe, reliable lifting. Your safety is our primary concern, and we are always innovating to achieve it with every lifter we make.

Centrifugal brake

The centrifugal brake is a critical component of Golia lifters. Precisely designed, this safety device quickly detects any increase in the speed of the lifter's up and down stroke, and immediately reduces its speed in case of emergency or malfunction. This advanced technology minimises the risk of accidents, protecting both the operator and the surrounding area.

Anti-drop device

Golia lifters ensure your safety thanks to their anti-drop devices, integrated into each aluminium telescopic extension as emergency safety equipment. This assures extra protection in critical situations, such as the failure of a structural component. The anti-drop device trips automatically and stops the load falling. Our integrated anti-drop devices testify to our commitment to offering lifting solutions that exceed regulatory requirements to assure worry-free operation and safety in the workplace.

Testing area

Every Golia machine undergoes strict tests in a special testing area, designed to simulate real operating conditions. During the process, specialised engineers check its stability and load capacity and the smoothness of its movements, to guarantee optimal performance. Every component is analysed to ensure durability and safety and supply a reliable product, ready for use in any working environment. Thanks to this phase, Golia maintains high quality standards to guarantee operators' satisfaction.

GTRAS

Accessory for shifting the glass pane to the left or right without moving the machine itself.

FGANCIO

Suction cup fork: available in 4 lengths with different load capacities.

fork length	load capacity
350 mm	280 kg
450 mm	250 kg
830 mm	170 kg
1540 mm	100 kg (h max 2 m)

GVENT4/OT

4 Ottovac plate suction cup unit (AA battery power) load capacity 260 kg, 360° rotation. Adjustable glass-stops included, for adjusting the tilt of the glass pane/frame and preventing it from colliding with the machine itself.

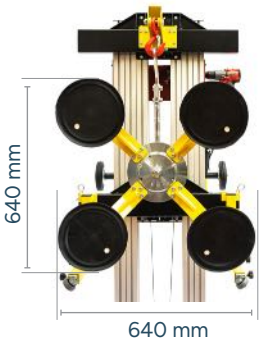

Adjustable glass stops included with the suction cup.

GVENT/4/MO

12 V electronic suction cup, load capacity 260 kg, 360° rotation. Adjustable glass-stops included, for adjusting the tilt of the glass pane/frame and preventing it from colliding with the machine itself.

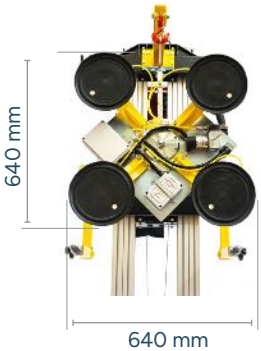

Adjustable glass stops included with the suction cup.

GPESO

Counterweight assembly with canisters. Includes handlebars, canisters and canister tray. Possible configuration:
- width 1100 mm
- length 1600 mm

CZAVO

Ballast truck with quick coupling and adjustable width strut.
Possible configurations:
- width 770 mm or 1100 mm
- length 1300 mm or 1600 mm

PMEDI

Accessory only available with CZAVO, for working in the short configuration with 300 mm reduction in overall width.

FCORT

Pair of 600 mm forks, only for use with CZAVO in the counterweighted configuration, to reach a position flush with the wall.

PENS4/OT

Telescopic suction cup for canopy roofs with 4 Ottovac plates
(AA battery power)
Load capacity 200 kg
With guided swing controllable from the ground

CULLA3500

Dimensions:
L: 1500 mm
Ø: 400 mm

Fold-away accessory with wheels for installing roller blinds.

Configurations and relative accessories

Thanks to its wide range of accessories and the ability to swap the feet around, the Golia Evo 2.0 can be reconfigured by the operator in numerous ways to suit the requirements of the individual installation.

A

Standard configuration without accessories

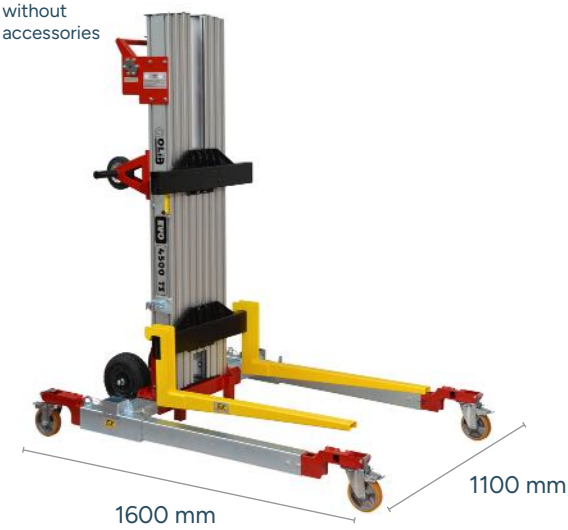

B

Required Accessories

GTRAS,
FGANCIO,
GVENT4/OT,
GPESO

E

Required Accessories

CZAVO,
FCORT

F

Required Accessories

CZAVO,
CULLA
FCORT

C

Required Accessories

GTRAS,
FGANCIO,
GVENT4/OT,
CZAVO

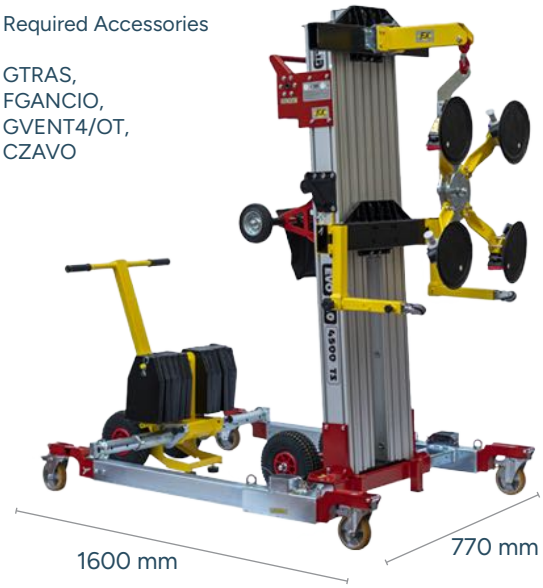

D

Required Accessories

GTRAS,
FGANCIO,
GVENT4/OT,
CZAVO,
PMEDI

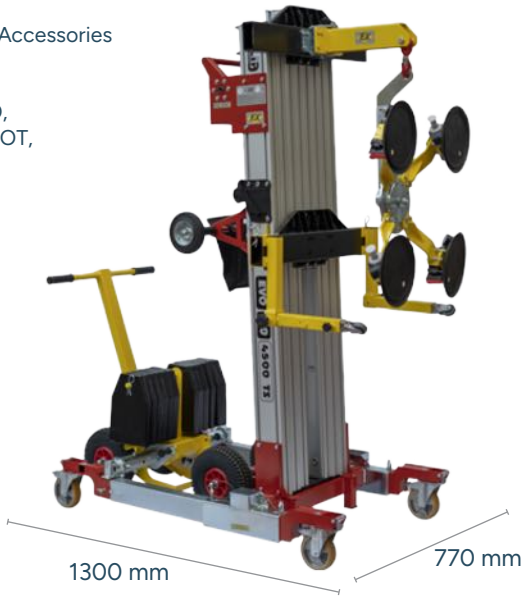

G

Required Accessories

GTRAS,
FGANCIO,
GVENT4/OT

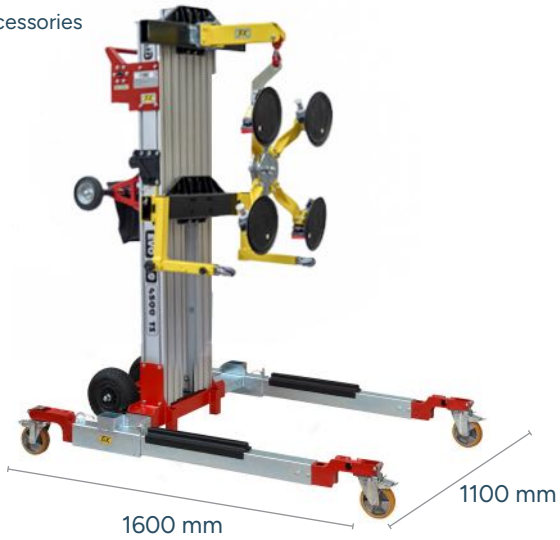

H

Required Accessories

PENS4/OT

EVO 2.0
4500 TS

Dimensions and Load Capacities

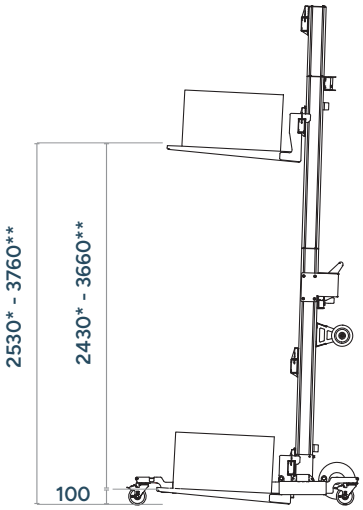

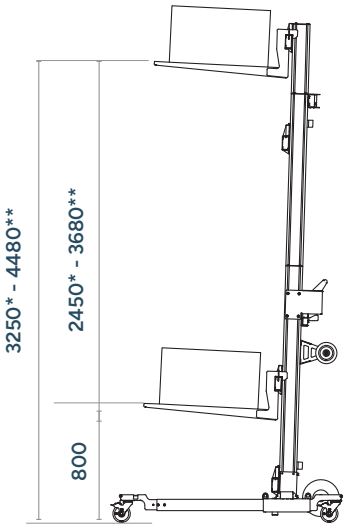

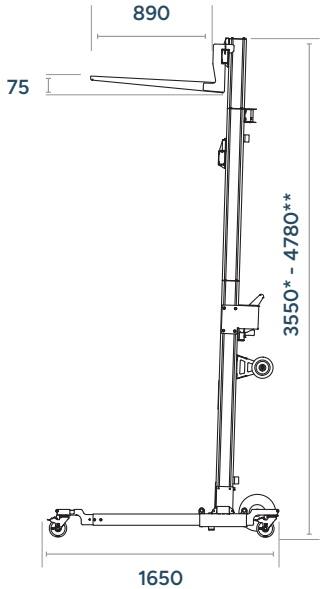

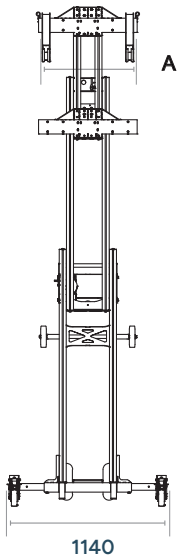

MAX fork dimensions
665 cm

MIN fork dimensions
575 cm

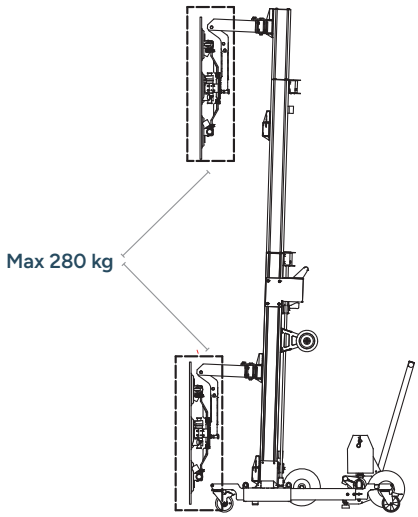

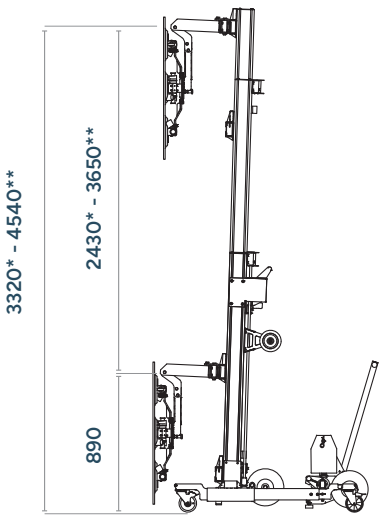

* EVO 3500/TS - ** EVO 4500/TS

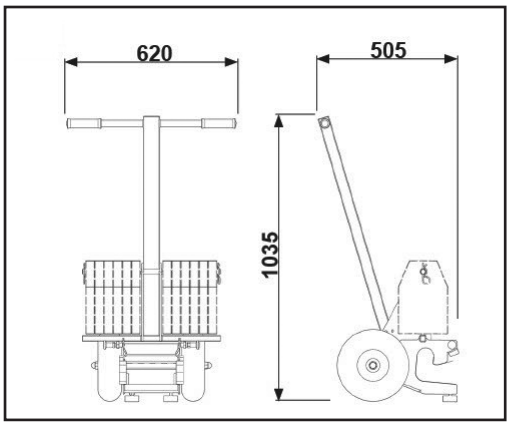

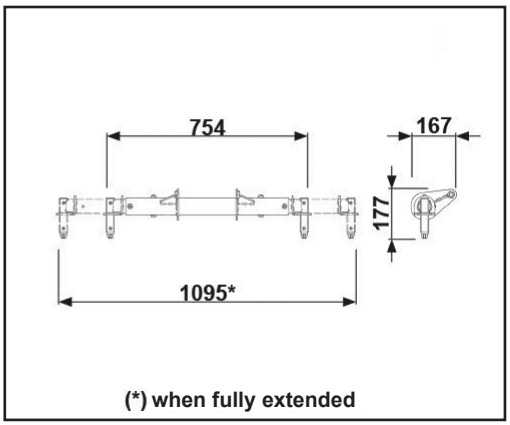

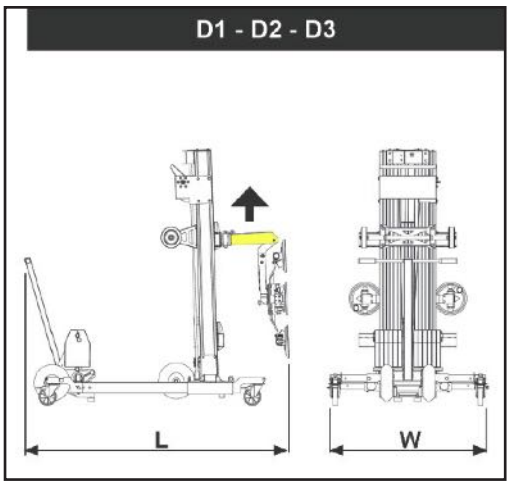

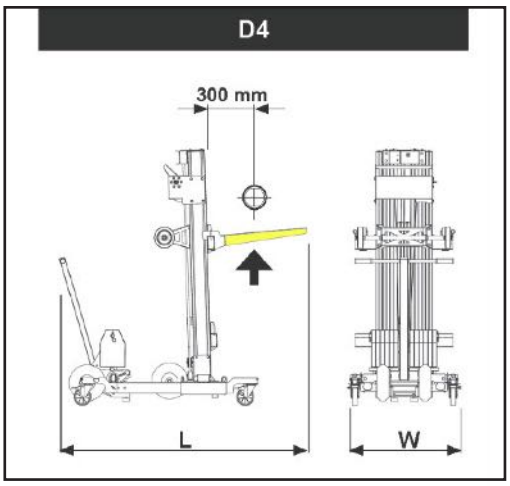

	D1	D2	D3	D4
L (mm)	1905	1905	1605	1770
W (mm)	1160	800	800	800
Max. (kg)	280	250	200	200

Glass Installation, SIA
glassinstallation.lv
info@glassinstallation.lv
Phone: +371 20 000 018
Ozolaines iela 1, Limbaži, LV-4001, Latvia